Waterproof

Item code	**86.D130.3411.01**
Product type	**Indoor**
Category	**Downlights**
Family	**Waterproof**
Subfamily	**Waterproof**
Pictograms	220 240 V · CRI 80 · SDCM 3 · CE · Driver INCL. · On Off · 50000h L80B10 · IP 65

Dimensions	
Product dimensions (mm)	**ø215*105mm cut size: ø200mm**

Scheme

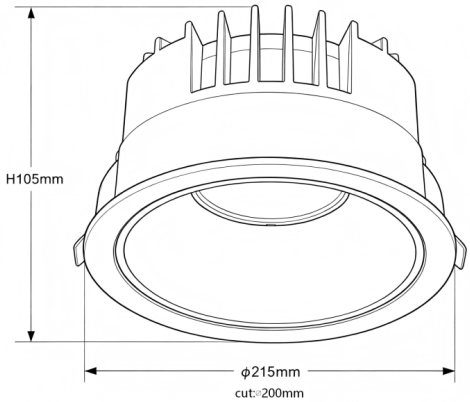

Product	
Real power (W)	**50**
Real luminous flux (Lm)	**4250**
Luminous efficiency (Lm/W)	**85**
Beam angle (º)	**15**
IP	**65.0**
Electrical feeding	**180-240V**
Control gear	**ON-OFF**
Colour temperature (K)	**4000**
Colour consistency (SDCM)	**SDCM5**
CRI	**90**